| | |
|---|---|
| Fabricant: | CFS (Gea Food) |
| Année de construction: | 2010 |
| Heures d'ouverture: | 300 |



Machines Kennes | Hercules 26 | 5126 RK Gilze | Nederland | T: +31 (0)161 - 45 11 36 | F: +31 (0)161 - 45 33 35
I: www.machineskennes.nl | KvK: 18065826 | BTW: NL8500.94.811.B01

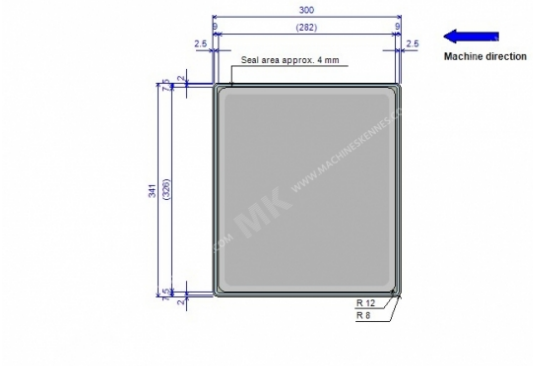


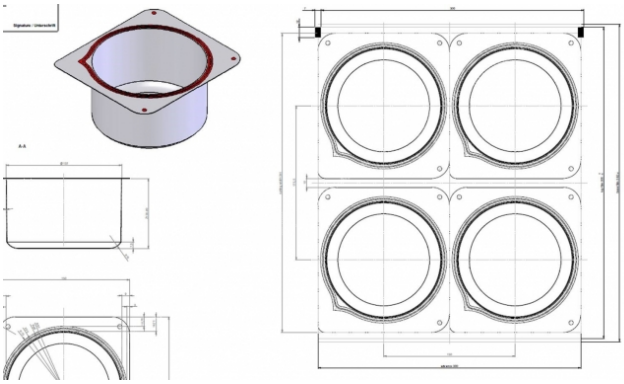

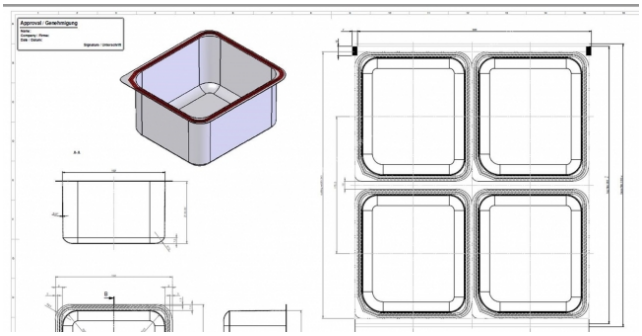

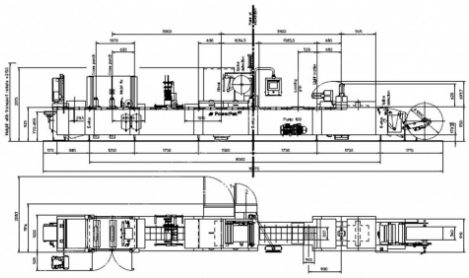

Image not found or type unknown



Machines Kennes | Hercules 26 | 5126 RK Gilze | Nederland | T: +31 (0)161 - 45 11 36 | F: +31 (0)161 - 45 33 35
I: www.machineskennes.nl | KvK: 18065826 | BTW: NL8500.94.811.B01