?????????????:	CFS (Gea Food)
??? ?????????:	2010
????? ???????? ???????:	300

Machines Kennes | Hercules 26 | 5126 RK Gilze | Nederland | T: +31 (0)161 - 45 11 36 | F: +31 (0)161 - 45 33 35
I: www.machineskennes.nl | KvK: 18065826 | BTW: NL8500.94.811.B01

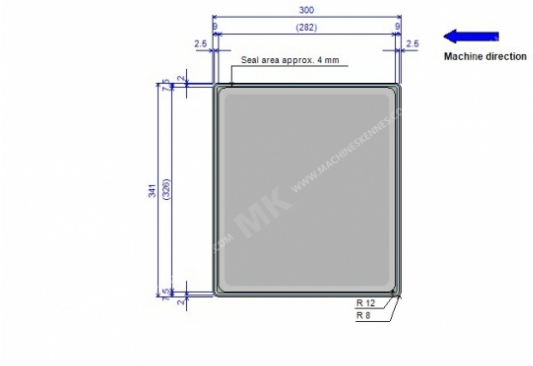

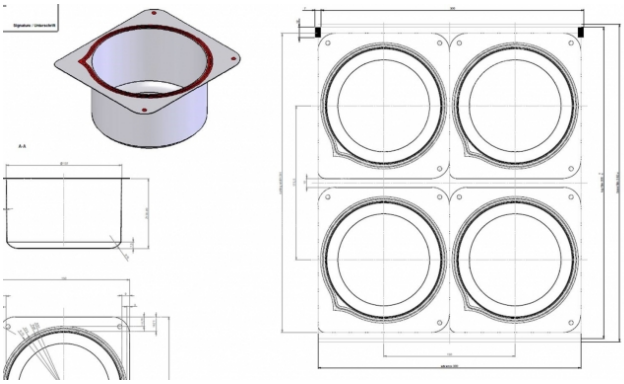

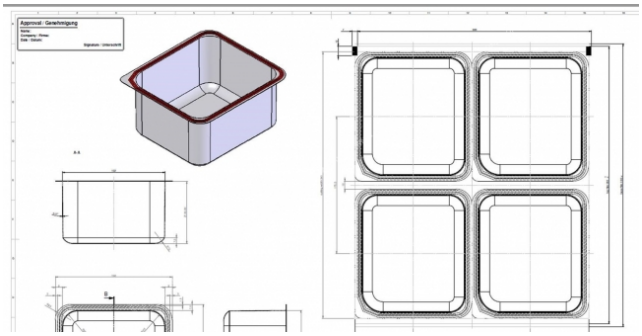

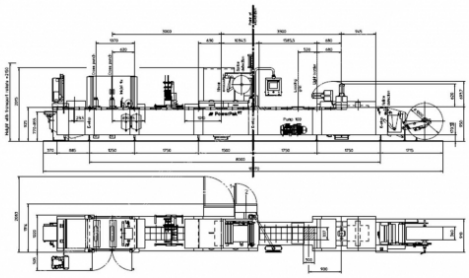

Image not found or type unknown

Machines Kennes | Hercules 26 | 5126 RK Gilze | Nederland | T: +31 (0)161 - 45 11 36 | F: +31 (0)161 - 45 33 35
I: www.machineskennes.nl | KvK: 18065826 | BTW: NL8500.94.811.B01